8760 Series Triple Adjustable Shock

ITEM NO.	PART NO.	DESCRIPTION
*	**AS-76RESCAP**	**RESERVOIR CAP ASSEMBLY (ITEMS 13 - 17, 19)**
*	**AS-76SB**	**SHAFT BEARING ASSEMBLY (ITEMS 32 - 33, 37 - 39)**
*	**AS-76EY___**	**EYELET ASSEMBLY (ITEMS 24 - 25, 45 - 49)**
1	CO-76__	COLLAR, BODY **(45mm or 55mm)**
2	HO-83__	HOSE, 8300 (6"-36")
3	BC-76__	BODY CAP, 8760 **(45mm or 55mm)**
	BC-7655-15	BODY CAP, 8760, 15MM MONOBALL **(55mm)**
	BC-76__E100	BODY CAP, 8760 EXT 1.00 **(45mm or 55mm)**
	BC-76E___	BODY CAP, 8760 (EXT .250 or EXT. .500) **(55mm)**
	BC-7645E160	BODY CAP, 8760 EXT 1.60 **(45mm)**
	BC-7645E4327	BODY CAP, 8760 EXT 4.327 **(45mm)**
4	RB-76_	RESERVOIR BODY, (4" - 7")
5	RH-76225_	RIDE HEIGHT, 8760 2.25 **(45mm or 55mm)**
	RH-76250	RIDE HEIGHT, 8760 2.50 **(55mm)**
	RH-76200	RIDE HEIGHT, 8760 2.00 **(45mm)**
6	BD-76___	BODY, 8760 C/O 10"- 24" **(55mm),** 10"- 13.5", **(45mm)**
7	SR-76225	SPRING RETAINER, 8760 (2.25 or EXT. .700) **(45mm or 55mm)**
	SR-76250	SPRING RETAINER, 8760 2.50 **(55mm)**
	SR-76200___	SPRING RETAINER, 8760 (2.00 or EXT. 700) **(45mm)**
8	JT-76POP	JET, POPPET
9	SP-15	SPRING, (FF71)
10	JT-76HAT	JET, TOP HAT
11	RR-05	RETAINING RING, .250 INTERNAL
12	JT-RDHSNG	JET, RD STRAIGHT THRU
	JT-76RD	**JET, REBOUND (ITEMS 8 - 12)**
13	OR-2010-B	O-RING, 2-010 BUNA 70 DURO
14	IU-06	VALVE CAP, HIGH TEMPERATURE
15	IU-04	VALVE CORE, 2000 PSI
16	IU-20-A	AIR VALVE, PORT O-RING, ALUM.
17	CP-76	CAP, RESERVOIR PORT O-RING
18	RR-06	WIRE RING, .0625 WIRE DIAM. X 1.900

ITEM NO.	PART NO.	DESCRIPTION
19	OR-2222-B	O-RING, 2-222 BUNA 70 DURO
20	SC-18	SCREW, SHCS 4-40 X1/4
21	SL-87	SEAL, DOWTY
22	OR-4222-B	QUAD RING,4-222 BUNA 70 DURO
23	PI-76	PISTON, 8760 RESERVOIR
24	MO-8T20	MONOBALL, .500 ID X .875 OD
25	RR-10	RETAINING RING, .875 SPIROLOC
26	SC-M6M8-N	SCREW, GRUB M6 X 8MM NYLON
27	PI-_____	PISTON
28	PB-55	PISTON BAND, 55MM
29	OR-2028-B	O-RING, 2-028 BUNA 70 DURO
30	VS-__	VALVE STACK, (AA-F)
31	VW-75020	WASHER, .750 X .020 X .500 VALVE
32	BU-10DU10	BUSHING, DU .625 X .625
33	OR-2114-V	O-RING, 2-114 VITON 75 DURO
34	NE-76	NEEDLE, 8760
35	NT-02R	RING NUT, .500 X 20, . 440 LONG
36	VW-99	TOP OUT PLATE, 1.375 X .500
37	OR-2221-B	O-RING, 2-221 BUNA 70 DURO
38	SB-765	SHAFT BEARING, 8760
39	SL-09	SHAFT WIPER, .625 POLY (BLUE)
40	OR-2007-B	O-RING, 2-007 BUNA 70 DURO
41	SH-76____	SHAFT, ADJ 10"- 24"
42	MR-ROD	METERING ROD
43	NT-12J	JAM NUT, .562 X 18
44	SR-76SRM	SPRING RETAINER, 8760 MOUNT
45	DO-09	DOWEL PIN, 1/8 X 1 1/8
46	KN-76RD	KNOB, RD ADJ
47	OR-2017-B	O-RING, 2-017 BUNA 70 DURO
48	CP-76RD	CAP, RD ADJUSTER
49	EY-76___	EYELET, 8760 **(2.1, 2.3, 2.6, 3.1, 4.05)**
50	DO-06	DOWEL PIN, 1/16 X 3/8

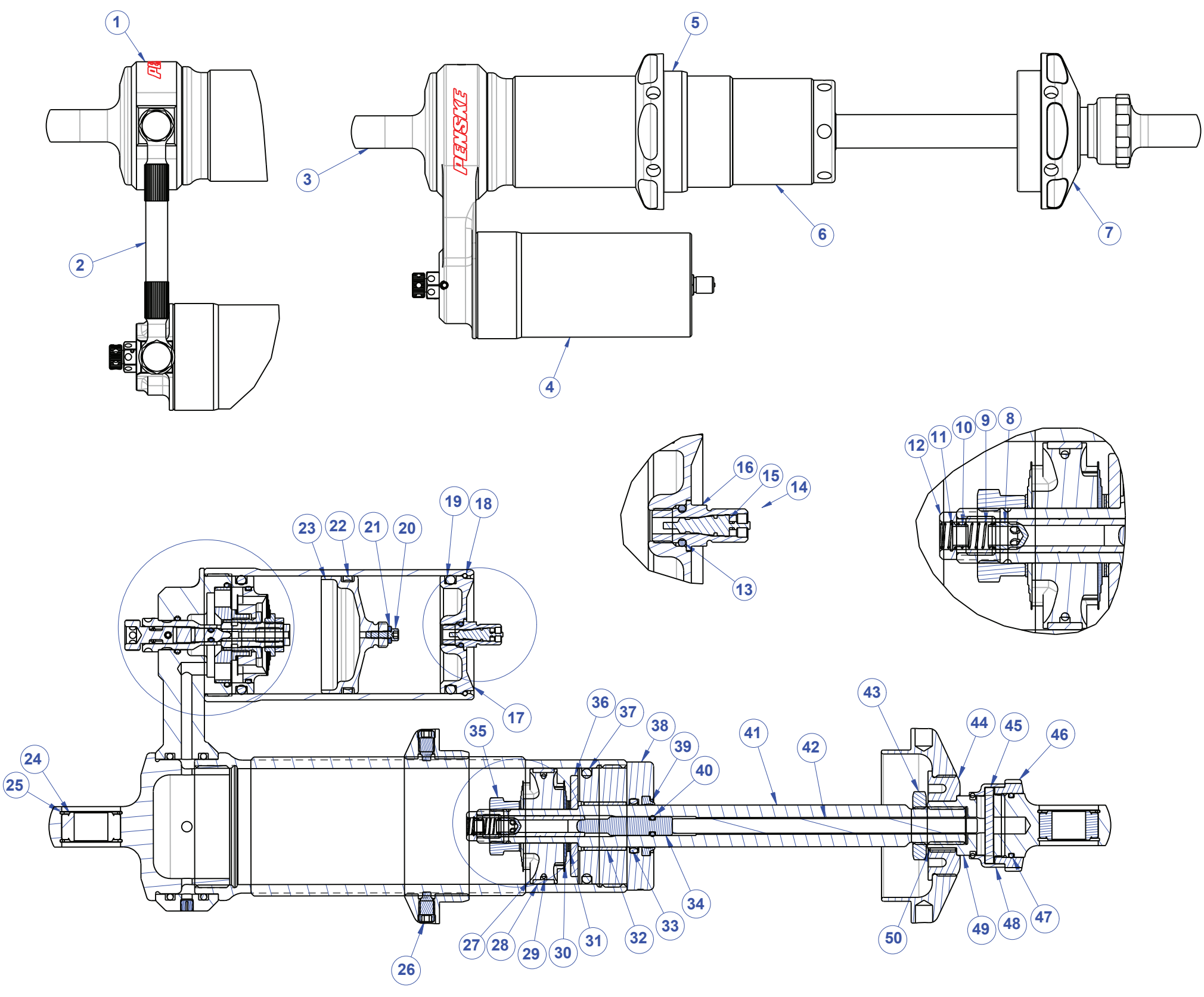

8760 Series Linear Compression Adjuster

ITEM NO.	PART NO.	DESCRIPTION
*	**AS-76CDSH**	**ASSM, 8760 CD HIGHSPEED SHAFT (1-3, 5, 12, 21, 27-28)**
1	SC-76CDLS	SCREW, CD LOW SPEED
2	SP-12	SPRING, (3648)
3	BA-093-ST	BALL, 3/32 STEEL
4	OR-2013-B	O-RING, 2-013 BUNA 70 DURO
5	OR-2004-B	O-RING, 2-004 BUNA 70 DURO
6	DO-06	DOWEL PIN, 1/16 X 3/8
7	SP-16	SPRING, (1460)
8	BA-187-ST	BALL, 3/16 STEEL
9	VW-120010	WASHER, 1.200 X .010 X .500 VALVE
10	CA-76CD	CAGE, COMPRESSION ADJUSTER
11	SC-76INS	SCREW, PISTON INSERT
12	JT-76CDSH	JET, HIGH SPEED SHAFT
13	CA-92	CAGE, CD CLASP .343 DIAMETER
14	RR-12	RETAINING RING, .343 EXTERNAL
15	CA-90	CAGE, CD TOP HAT .343 DIAMETER
16	OR-2222-B	O-RING, 2-222 BUNA 70 DURO
17	OR-2013-B	O-RING, 2-013 BUNA 70 DURO
18	OR-2028-B	O-RING, 2-028 BUNA 70 DURO

ITEM NO.	PART NO.	DESCRIPTION
19	PI-76CD	PISTON, COMP ADJUSTER
20	HG-76SIDE	HOUSING, 8760 SIDE
	HG-76TOP	HOUSING, 8760 TOP
	HG-76PB55	HOUSING, PB 55MM
	HG-76PB45	HOUSING, PB 45MM
21	DO-18	ROLL PIN, 1/16 X 1/2
22	BA-125-ST	BALL, 1/8 STEEL
23	SP-14	SPRING, (A109)
24	SC-08	SCREW, SOCKET SET8/32 X 1/8
25	VW-01-C	CRUSH WASHER, .25 ID, COPPER
26	SC-06	SCREW, SHCS 1/4-20 X 3/4
27	SH-76CD12	SHAFT, CD HIGH SPEED 12PT
28	OR-2010-B	O-RING, 2-010 BUNA 70 DURO
29	VW-147510	WASHER, 1.475 X .010 X .500 VALVE
30	VW-135008	WASHER, 1.350 X .008 X .500 VALVE
31	VW-120006	WASHER, 1.200 X .006 X .500 VALVE
32	VW-105004	WASHER, 1.050 X .004 X .500 VALVE
33	VW-90008	WASHER, .900 X .008 X .500 VALVE
34	VW-90010	WASHER, .900 X .010 X .500 VALVE
35	VW-90020	WASHER, .900 X .020 X .500 VALVE

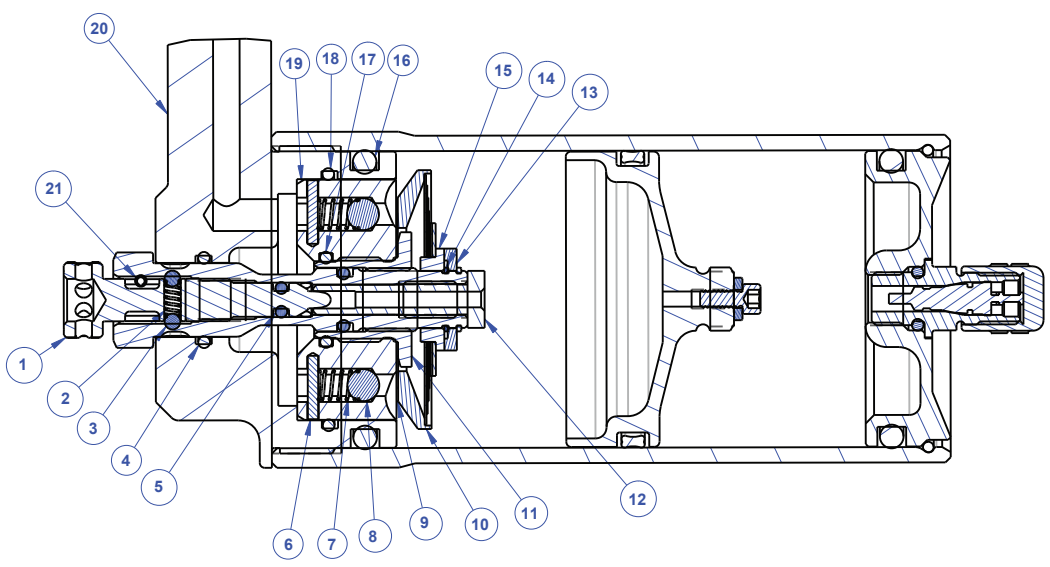

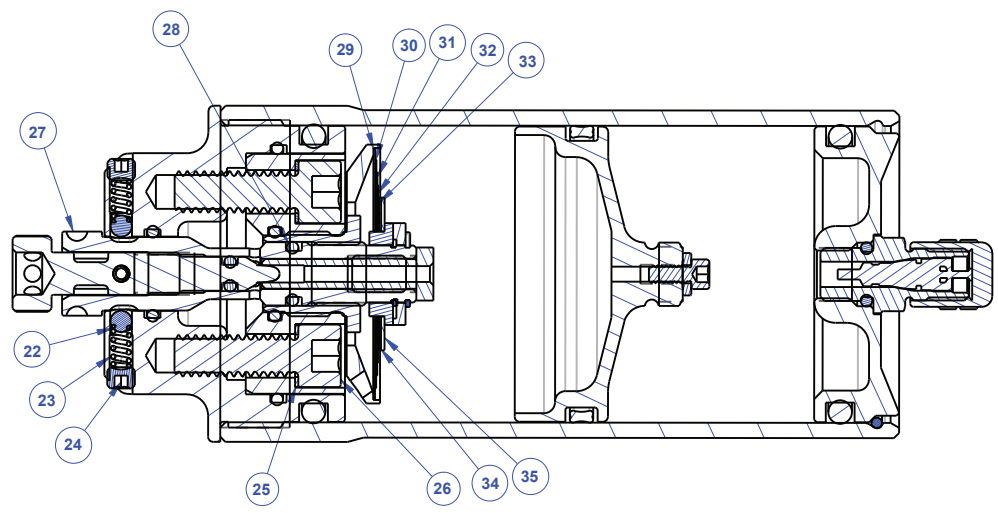

8760 Series Digressive Compression Adjuster

ITEM NO.	PART NO.	DESCRIPTION
*	**AS-76CDSHDIG**	**ASSM, 8760 CD DIG HIGHSPEED SHAFT (ITEMS 1,2,5,7,16-18)**
1	SC-76LS	SCREW, 8760 CD CURVED LOW SPEED
2	SH-76CDSHDIG	SHAFT, CD HIGH SPEED, DIG. CD UNIT
3	OR-2013-B	O-RING, 2-013 BUNA 70 DURO
4	HG-76SIDE	HOUSING, 8760 SIDE
	HG-76TOP	HOUSING, 8760 TOP
	HG-76PB55	HOUSING, PB 55MM
	HG-76PB45	HOUSING, PB 45MM
5	OR-2010-B	O-RING, 2-010 BUNA 70 DURO
6	OR-2222-B	O-RING, 2-222 BUNA 70 DURO
7	JT-76CDSH	JET, HIGH SPEED SHAFT
8	SC-76INS	SCREW, PISTON INSERT
9	PI-76CDDIG	PISTON, CD DIG
10	OR-2025-B	O-RING, 2-025 BUNA 70 DURO
11	NT-76CDJ	JAM NUT, 8760 H/S CD SHAFT TOP HAT
12	NT-76CDT	NUT, 8760 H/S CD SHAFT TOP HAT
13	SC-08	SCREW, SOCKET SET8/32 X 1/8
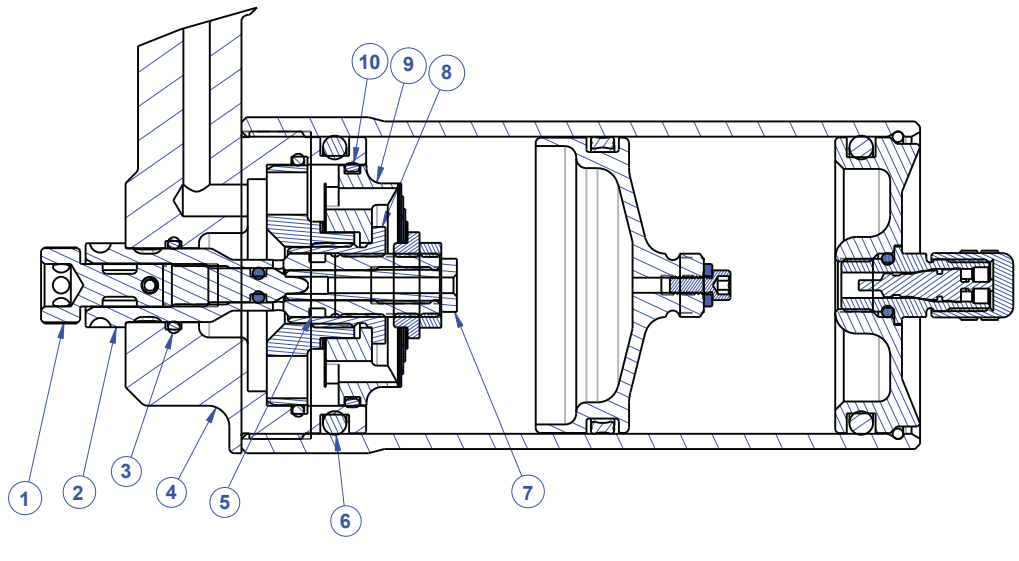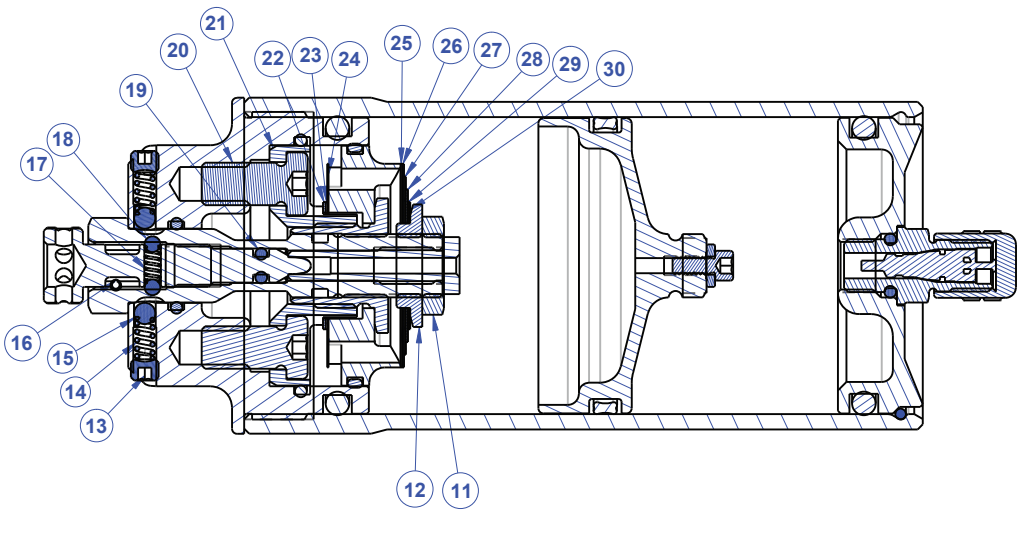
ITEM NO.	PART NO.	DESCRIPTION
14	SP-14	SPRING, (A109)
15	BA-125-ST	BALL, 1/8 STEEL
16	DO-18	ROLL PIN, 1/16 X 1/2
17	SP-12	SPRING, (3648)
18	BA-093-ST	BALL, 3/32 STEEL
19	OR-2004-B	O-RING, 2-004 BUNA 70 DURO
20	SC-14	SCREW, SHCS 1/4-20 LOW HEAD
21	PI-76DIGPLATE	PISTON, 8760 DIG CD PLATE
22	VW-75015-625	WASHER, .750 X .015 X .625 VALVE
23	VW-75010-625	WASHER, .750 X .010 X .625 VALVE
24	VW-120004-625	WASHER, 1.200 X .004 X .625 VALVE
25	VW-120008	WASHER, 1.200 X .008 X .500 VALVE
26	VW-120010	WASHER, 1.200 X .010 X .500 VALVE
27	VW-105012	WASHER, 1.050 X .012 X .500 VALVE
28	VW-90012	WASHER, .900 X .012 X .500 VALVE
29	VW-75006	WASHER, .750 X .006 X .500 VALVE
30	VW-75008	WASHER, .750 X .008 X .500 VALVE